NCCS Network Roadmap

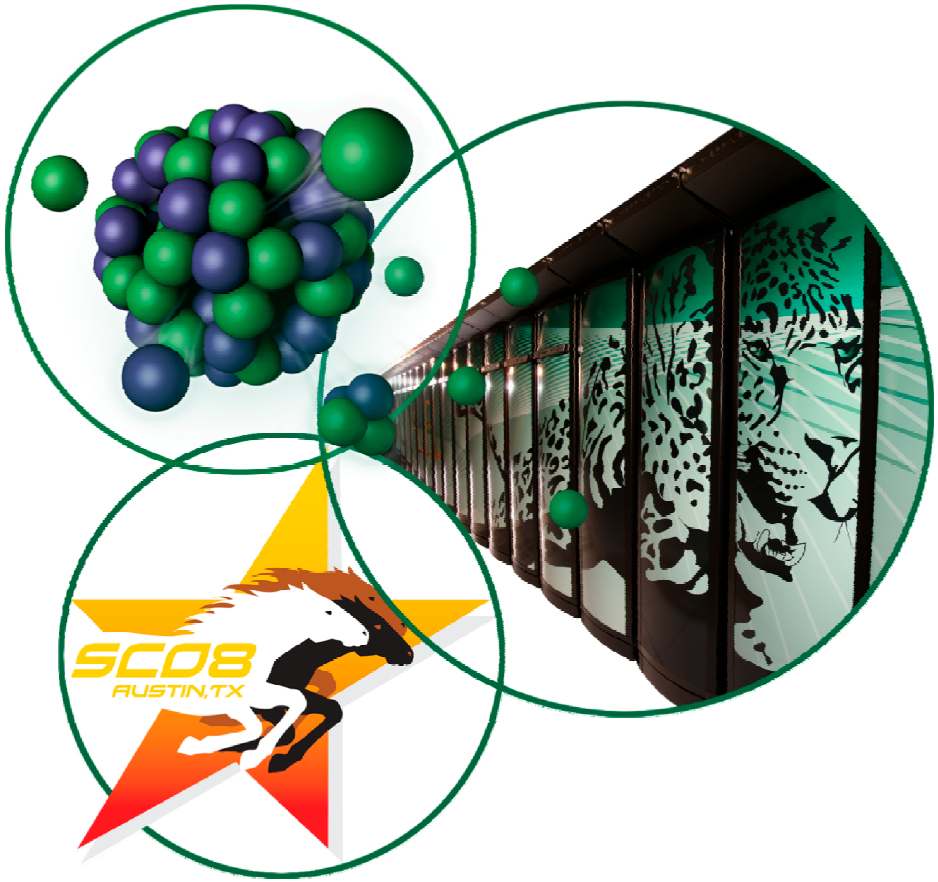

Presented by

Josh Lothian

High Performance Computing Operations
National Center for Computational Sciences

NCCS network roadmap

Summary: Hybrid Ethernet/InfiniBand (IB) network provides both high-speed wide-area connectivity and ultra-high speed local-area data movement to meet the data management demands of groundbreaking scientific simulations

- **2008**
  - **Designed and installed the IB LAN infrastructure to satisfy the file system needs of the Cray XT5 system**
  - **Increased security on 10 Gb WAN connections with new per-flow (or flow-based) analysis and IDS technologies**
- **2009**
  - **Evaluate Lustre on IB/WAN for remote file system access**
  - **Enhance 10 Gb WAN monitoring and security capabilities**

NCCS network roadmap summary

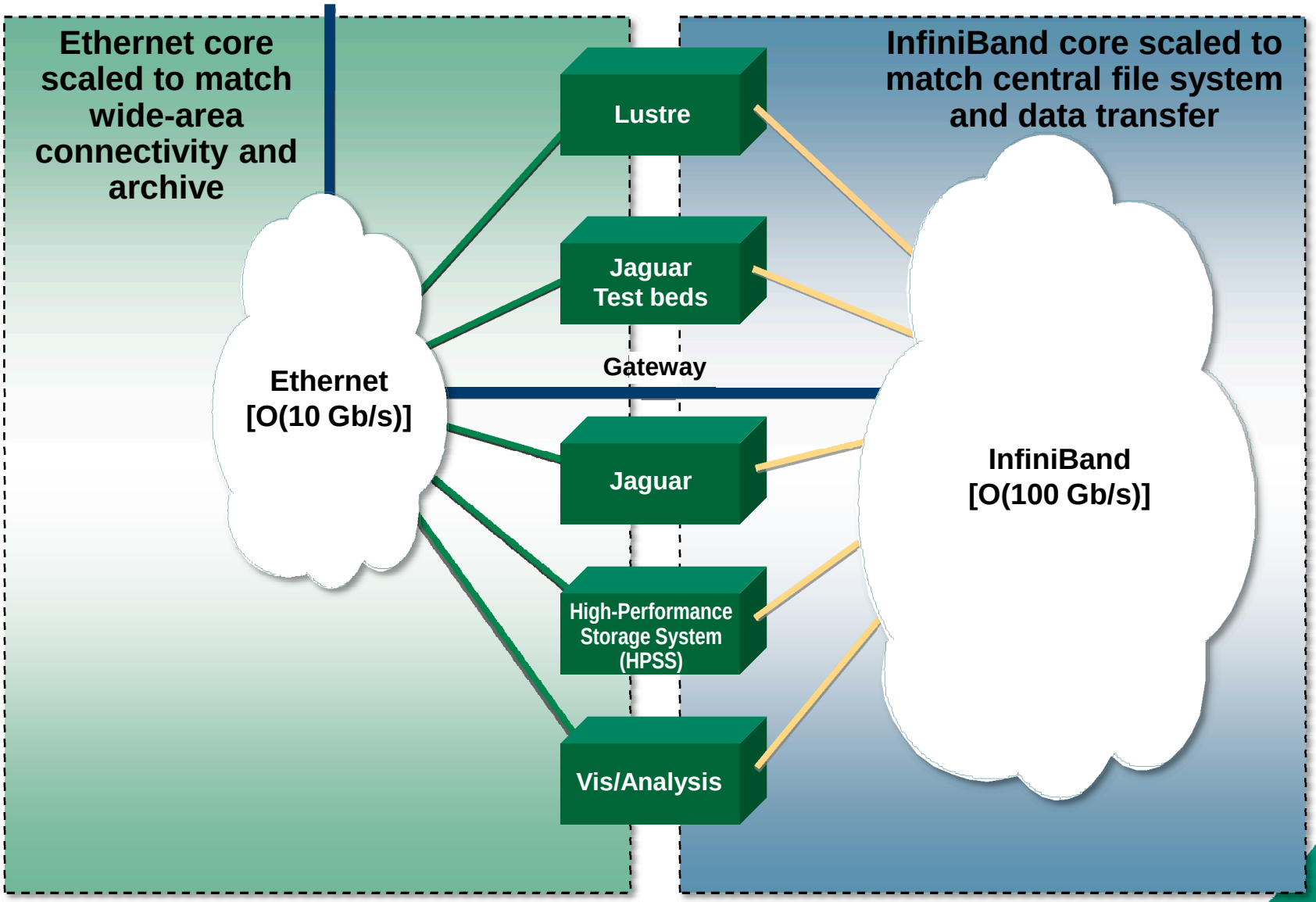

NCCS WAN overview

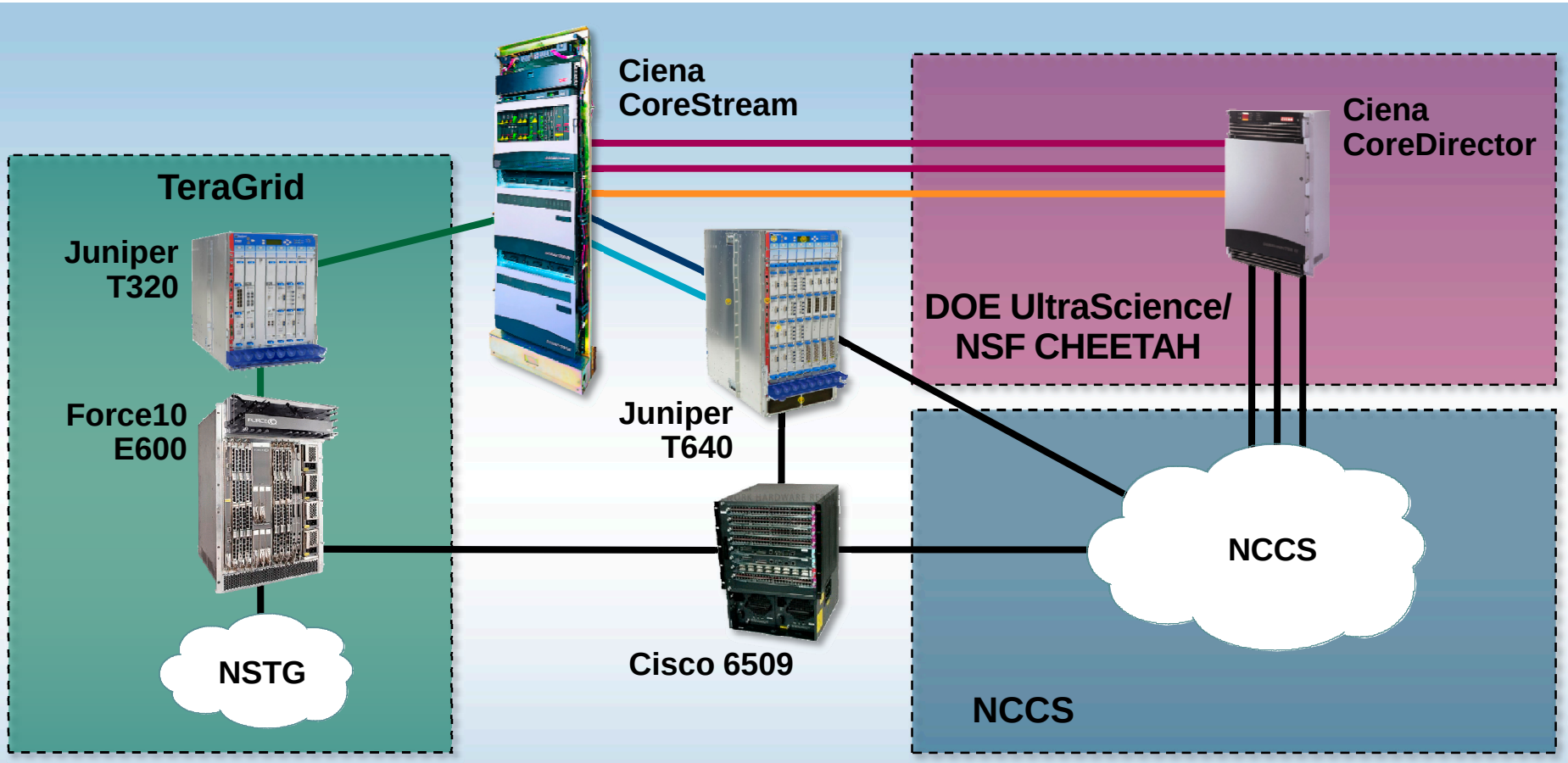

- OC-192 to TeraGrid
- 2 × OC-192 to USN
- OC-192 to CHEETAH
- OC-192 to Internet2
- OC-192 to ESnet
- Internal 10 Gb Link
- Internal 1 Gb Link

2008 NCCS network

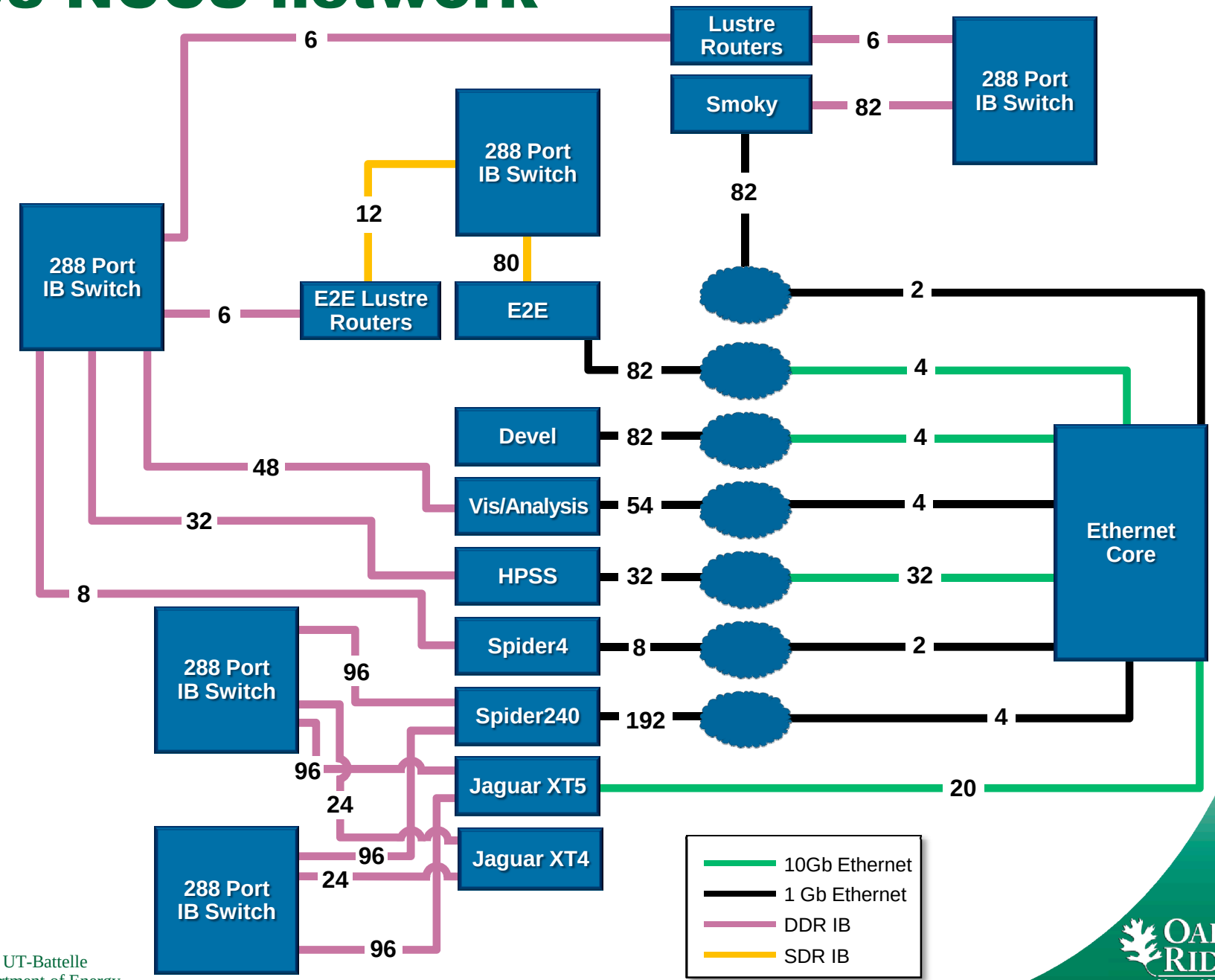

Oak Ridge National Laboratory

2009 NCCS network

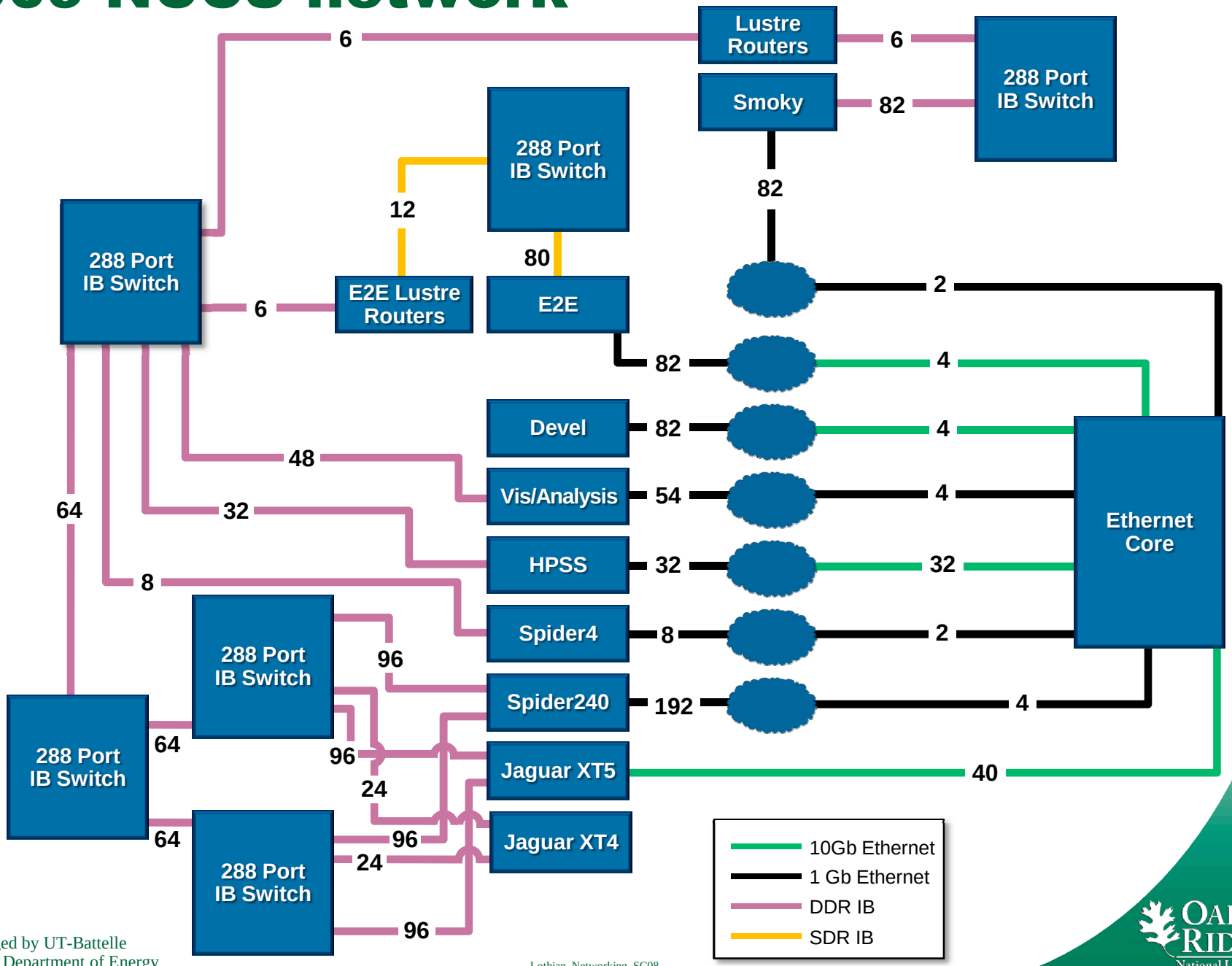

Oak Ridge National Laboratory

2008 milestones

March 2008: Completed move of NCCS network core

August 2008: Completed deployment of flow-based NIDS

August 2008: Completed installation of IB core

September 2008: Completed deployment of Bro NIDS

2009 milestones

January: Deploy 10 Gb line-rate firewall

January: Fully connect IB network core

March: Enable routing XT4/XT5 HSN to IB SAN

Late calendar year 2009: Scale out 10 Gb Ethernet core network

Contact

Josh Lothian

High Performance Computing Operations
National Center for Computational Sciences
(865) 241-5563
lothian@ornl.gov