Blackcomb: Hardware–Software Co-design for Nonvolatile Memory in Exascale Systems

Presented by

Jeffrey Vetter
Oak Ridge National Laboratory

Robert Schreiber
HP Labs

Trevor Mudge
University of Michigan

Yuan Xie
Penn State University

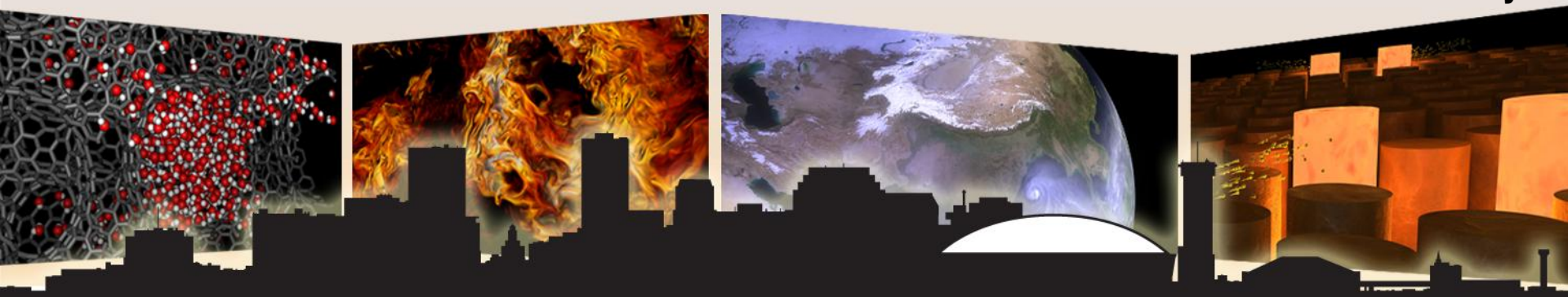

U.S. DEPARTMENT OF ENERGY

OAK RIDGE National Laboratory

Blackcomb overview

- The Blackcomb project partners members of the Future Technologies group at ORNL with researchers from Hewlett Packard, the University of Michigan, and Penn State University
- Funding awarded under the Office of Advanced Scientific Computing Research (ASCR) calls for Advanced Architectures and Critical Technologies for Exascale Computing
- Addresses the call's request for
  - Basic and applied research to address fundamental challenges in the design of energy-efficient, resilient hardware and software architectures and technology for high performance computing systems at exascale

Exascale challenges

Based on workshops and numerous other exploration activities, the ASCR call cites several anticipated challenges:

1. **Exascale computer systems may be comprised of as many as a billion cores, capable of 10 billion-way concurrency in simultaneous operations**
2. **Data movement and power constraints will be the limiting factors for exascale systems, rather than processors and computational operations**
3. **Memory per core is expected to decline sharply, and the performance of storage systems will continue to lag**
4. **Multi-level storage architectures that span multiple types of hardware will require new approaches to run-time data management and analysis**

Blackcomb objectives

- In response, Blackcomb proposes a new distributed computer architecture that addresses the resilience, energy, and performance requirements of exascale systems:
  - Replaces mechanical-disk-based data-stores with energy-efficient nonvolatile memories (NVRAM)
  - Places low power compute cores close to the data store
  - Reduces number of levels in the memory hierarchy
- Addresses device scalability and energy efficiency of charge-based memories, while eliminating the problem of increasing DRAM soft-error rates
- Evaluates the impact of the proposed architectures on the performance of critical DOE applications

Nonvolatile memory (NVM)

- "Nonvolatile" in that it retains data even when not powered
- Currently used as a buffer for secondary storage in today's HPC systems
- However, questions about the future of DRAM scaling, combined with NVM technology advances, make it increasingly attractive as a primary storage substitute

	SRAM	DRAM	NAND Flash	PC-RAM	STT-RAM	R-RAM
Data Retention	N	N	Y	Y	Y	Y
Memory Cell Factor (F^2)	50-120	6-10	2-5	6-12	4-20	<1
Read Time (ns)	1	30	50	20-50	2-20	<50
Write / Erase Time (ns)	1	50	$106\text{-}10^5$	50-120	2-20	<100
Number of Rewrites	10^{16}	10^{16}	10^5	10^{10}	10^{15}	10^{15}
Power Read/Write	Low	Low	High	Low	Low	Low
Power (Other than R/W)	Leakage Current	Refresh Power	None	None	None	None

Blackcomb approach

- Identify and evaluate the most promising nonvolatile memory (NVM) technologies
- Explore assembly of NVM technologies into a storage and memory stack
- Propose an exascale HPC system architecture that builds on our new memory architecture
- Build the abstractions and interfaces that allow software to exploit NVM to its best advantage
- Characterize key DOE applications and investigate how they can benefit from these new technologies

Blackcomb challenges

- Understanding and mitigating limitations of NVMs as a general-purpose memory: higher write overheads and lower life endurance than SRAM/DRAM
- Requires novel analytical/simulation hybrid model to understand trade-offs between energy efficiency, resilience and performance
- Requires methodology for evaluating productivity of proposed programming models that exploit NVM to improve fault-tolerance of distributed applications

Expected impact

- Address energy scalability of future exascale systems
  - NV memories have zero standby power
- Increase system reliability
  - MRAM/PCRAM are resilient to soft errors
- Develop new programming models that exploit NVMs to improve the fault-tolerance of applications

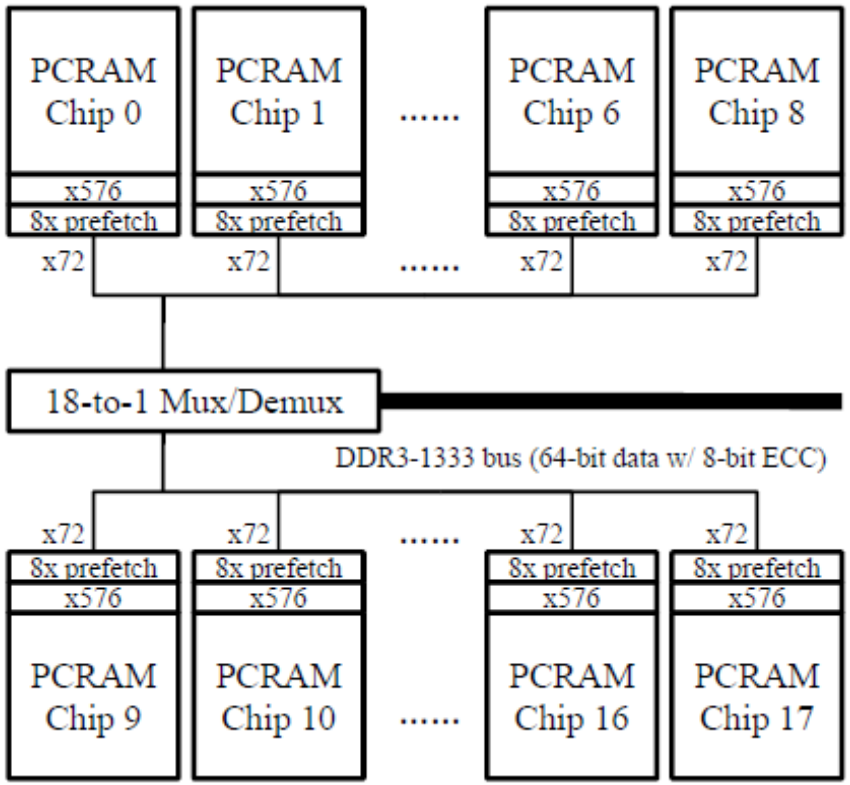

Potential NV-RAM DIMM Layout

ORNL contributions to Blackcomb

ORNL researchers will:

- **Identify and characterize a few key applications, making results available to the other areas of the study to provide a quantitative basis for research decisions**
- **Develop a "failure" taxonomy, quantify metrics for this taxonomy for important scientific applications, and investigate the use of this information**
- **Port the techniques developed in other areas of the study to the selected applications and perform testing with realistic workloads**

Contacts

Jeffrey Vetter

Future Technologies Group
Computer Science and Mathematics Division
(865) 356-1649
vetter@ornl.gov

Collin McCurdy

(865) 241-6433
cmccurdy@ornl.gov