PLASMA
Parallel Linear Algebra Software for Multicore Architectures

Presented by

Innovative Computing Laboratory
University of Tennessee
and
University of California–Berkeley
University of Colorado–Denver

Institutions

University of Tennessee Knoxville

University of Colorado Denver

University of California Berkeley

Sponsors

Clear Architectural Model

PLASMA

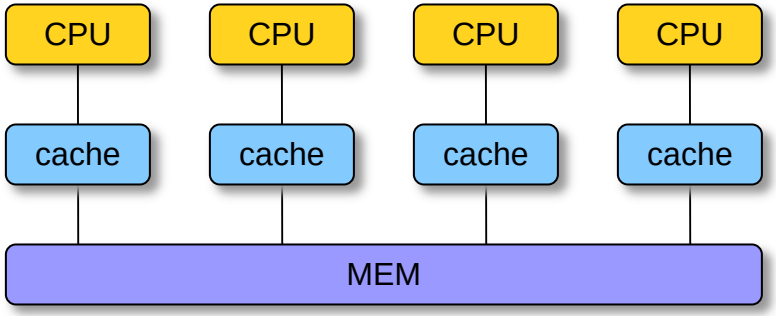

LAPACK

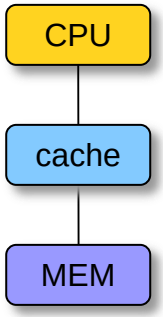

ScaLAPACK

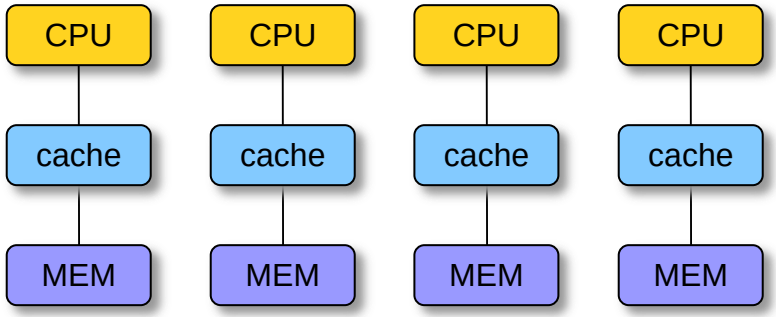

Modern Software Stack

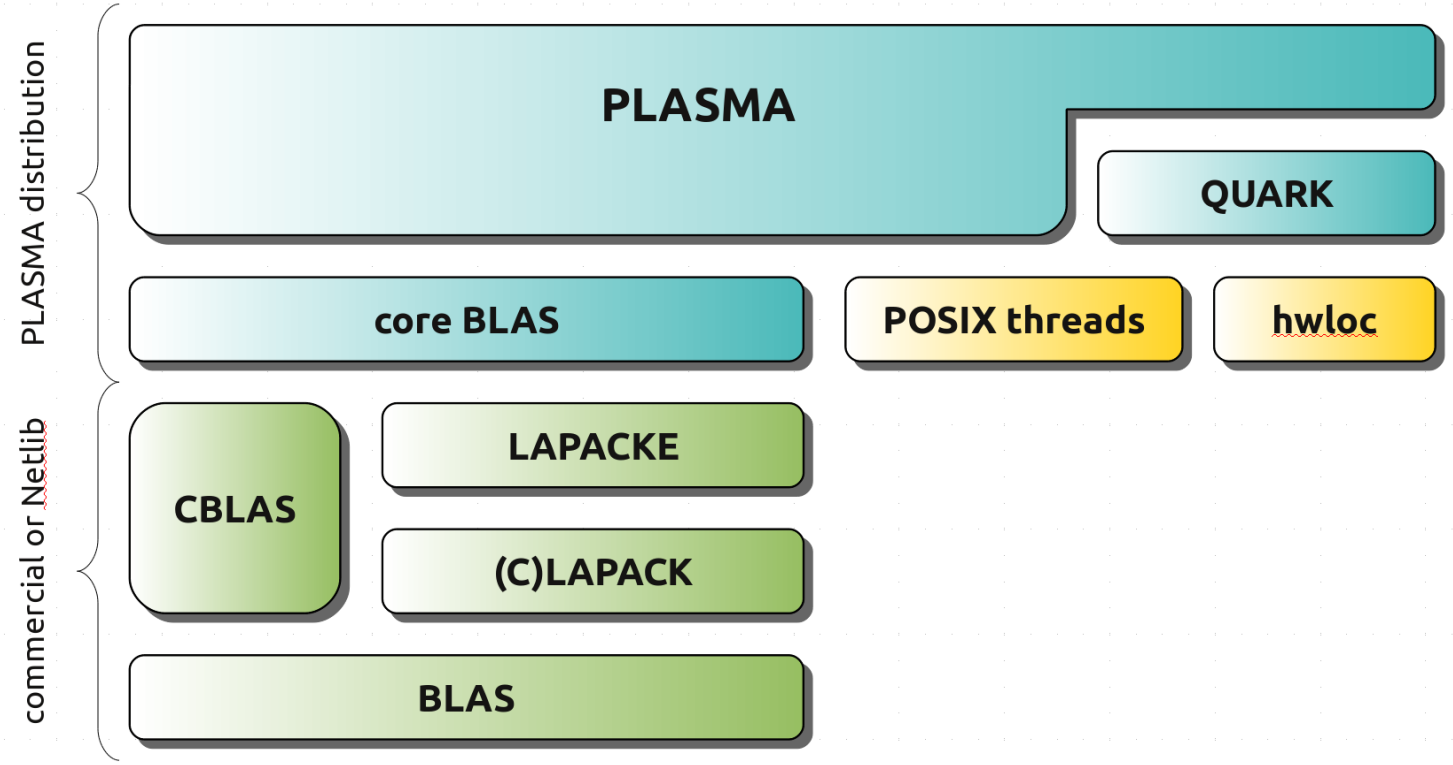

Performance: Linear Systems

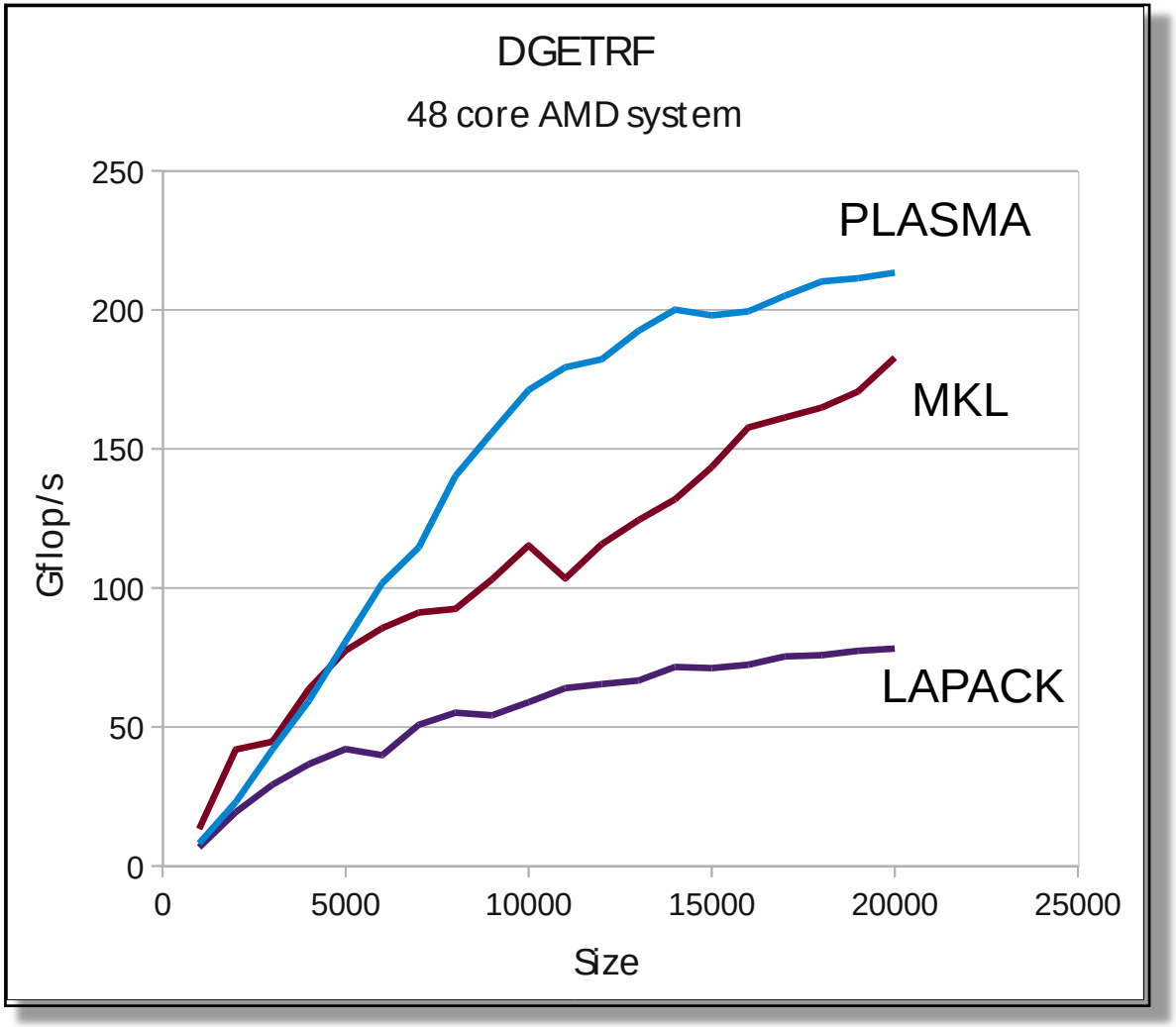

Performance: Least Squares

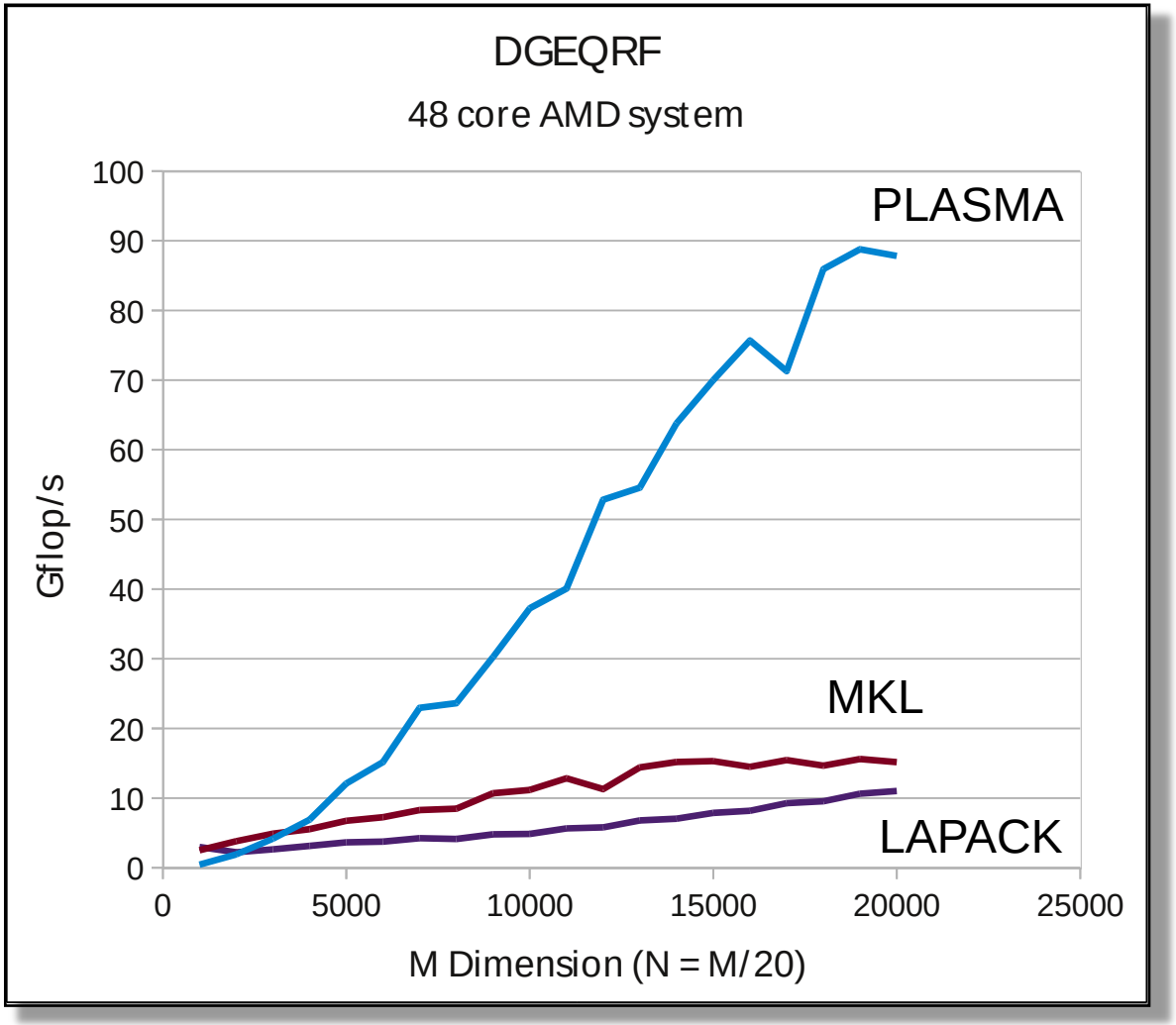

Performance: Singular Values

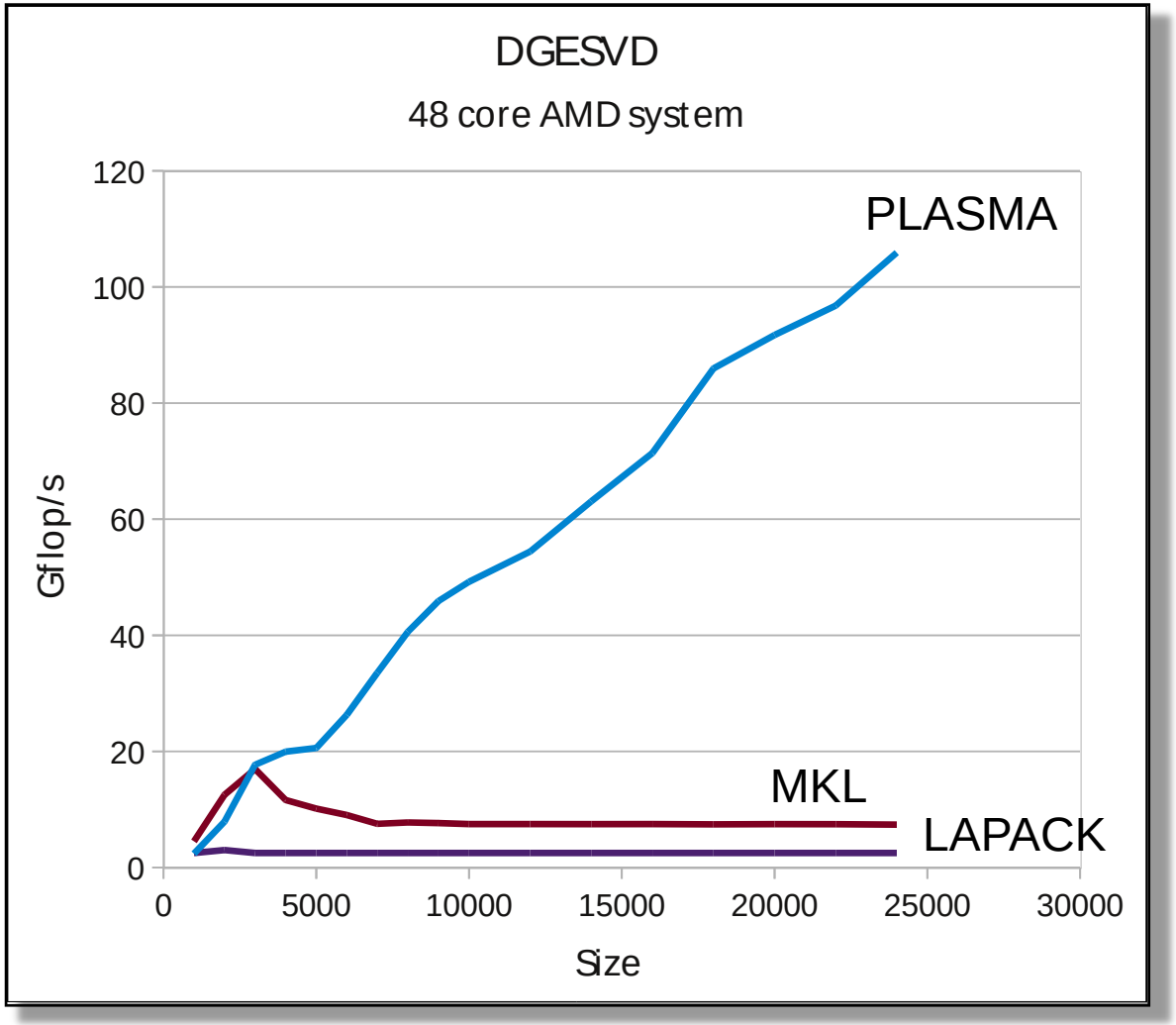

Extensive Documentation

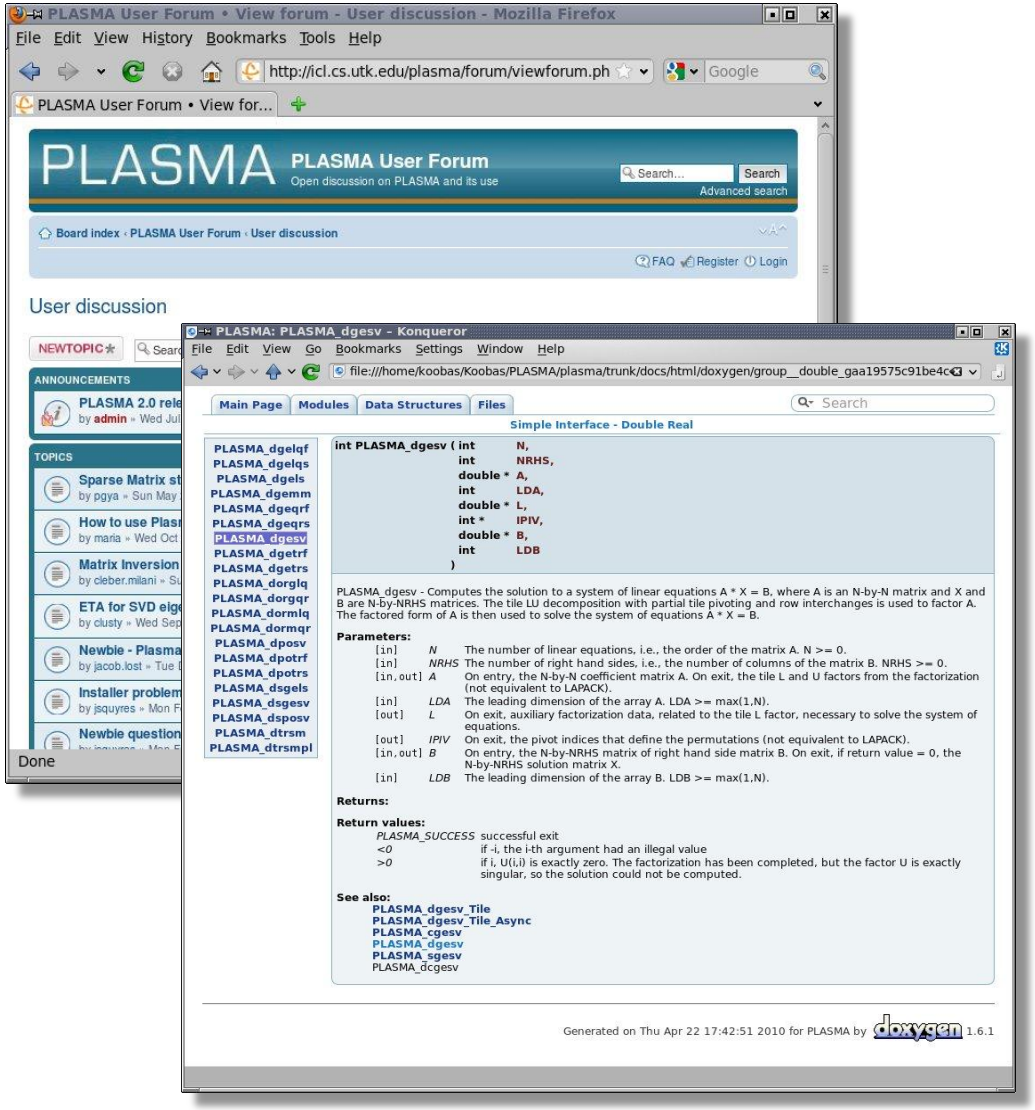

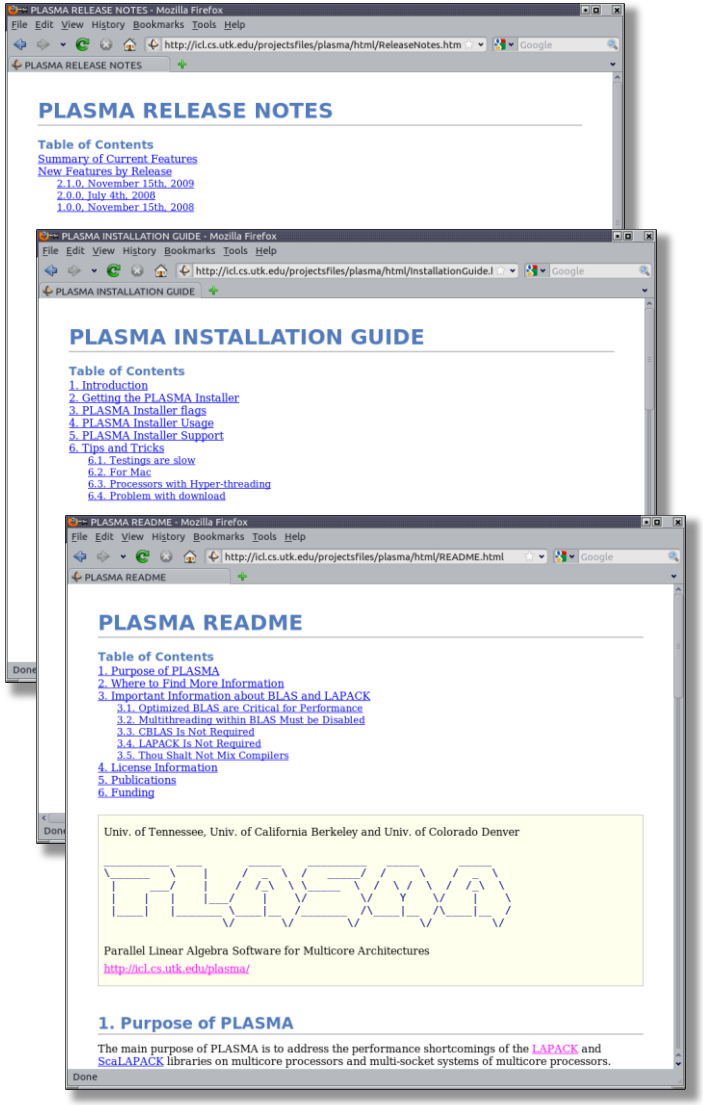

Oak Ridge National Laboratory